Vinyl Traditional (Hip) Roof Pavilion

Thank you for your purchase of your new Open Gable pavilion. Depending on the size of your pavilion, installation can usually be completed in 1 to 2 days. These instructions are meant to serve as a guide for people with a base knowledge of general handyman skills. ***This assembly requires a minimum of two people to complete.***

Please always check with your local building codes, they will vary from state to state.

Consider a few details before beginning assembly:

1. The base for the pavilion must be solid and level. If installing on a concrete slab or on concrete footers, they should be level where the posts will rest. If they are not, it may be necessary to cut the tops of the posts so that the tops are all level. Other than this, no cutting is necessary. If you feel that you will need to make any additional cuts, please contact us before doing so. ***Making cuts without calling irst may make installation di icult or impossible or void our warranties.***

2. When you are connecting to concrete, you will use wedge bolts, which are included in the kit. If connecting to an existing deck, a lag bolt and deck screws (not included) will replace the wedge bolt.

3. The pavilion does not give you the ability to alter the location of the posts. It is important that they are laid out correctly and that you double check for accuracy before permanently attaching it to your base.

Site Preparation

It is important that the site is properly prepared before beginning assembly. It is imperative that the site be level. You have a few choices when installing this structure, the two most common are to anchor the posts to concrete pad/wood decking or attaching to a concrete footer or to 16" wide Sono tubes. Sinking the posts into the ground is not recommended unless it is called for by your local building codes.

Anchoring the posts to concrete/wood decking, this is the most common method and is also the simplest. For this you will only need to provide a level concrete or wood decking surface, and then layout our template on your surface. Mark out the squares where the posts and brackets will go. Line up the markings you made and this is where you will set the posts. This is the method that we will use for the following instructions:

Please check your local building codes for the depth required for your footers/concrete slab. Also if using concrete footers you will need to make sure that all of the tops of the footers are level with each other before you start to build. Contact your Project Advisor with any questions that you may have.

Tools Needed for Assembly:

- Screw Gun/Drill	**- Hammer**	**- Level**	**- Tape Measure**
- C Clamps	**- Socket Set**	**- Ladder**	**- Circular Saw**

Note: An air-nailer or stapler can be used for rubber or asphalt shingles. (Air nails and staples not included in the kit.)

Note: You will also be sent a parts list with your pavilion.
All hardware is included in each pavilion kit. The speci ic hardware will vary depending on the pavilion. Please see your parts list for details.

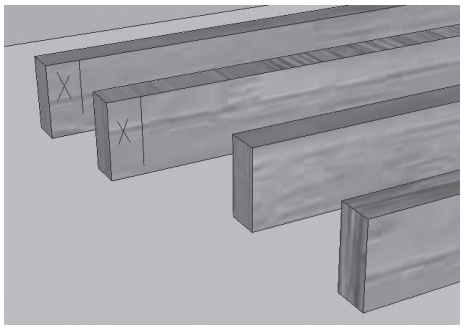

Setting up the template:

1. Your pavilion kit includes a wooden template that you will use to mark your post locations. You will notice that two of the 2x4 boards have a marking near the ends. You will build a box that will reveal the outside corners of the posts when properly placed.

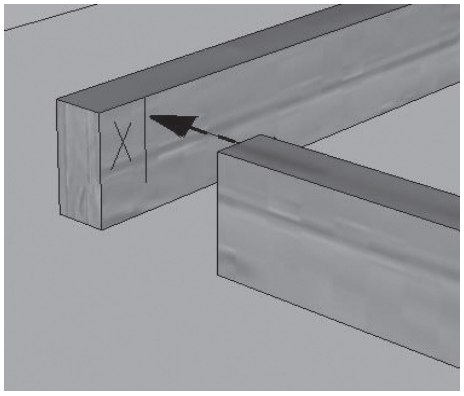

2. Arrange the template pieces so that they are positioned in the exact location of where the pavilion will be placed. The boards with the marking on the end will be across from each other. The marks will show where the other boards will be attached to create the box.

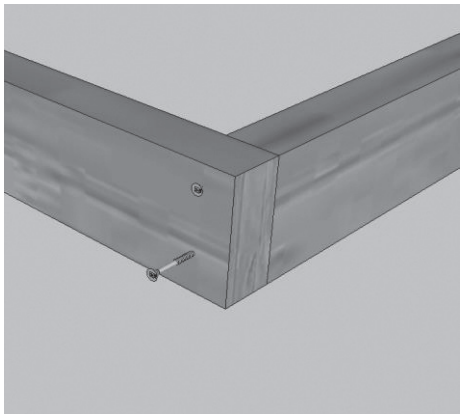

3. Connect the corners of the template pieces by driving two 2½" screws through the side of the template boards.

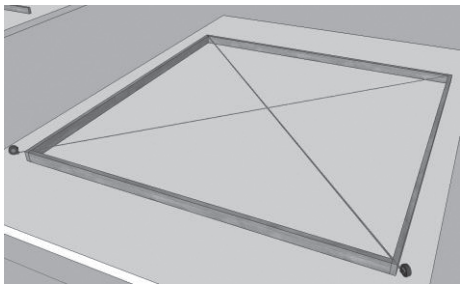

4. Once the template is in position, you will need to square the template. Do this by measuring diagonally from one corner to its opposite corner. Then measure diagonally between the other two corners. These two dimensions MUST be the same. Adjust the template until the diagonal measurements are identical.

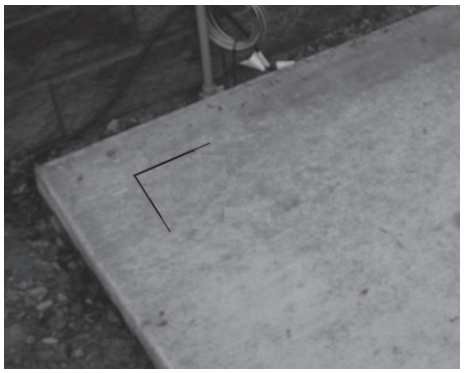

5. Once the template is “square”, mark the post locations (using the INSIDE corners of the framed box) on the concrete slab with a pencil. After you have all the post locations marked on the concrete slab, remove and set the wooden template aside.

Post and Beam Assembly:

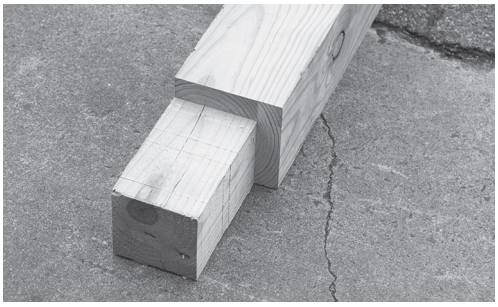

Note: The posts are notched on two sides. Turn the notches toward the outside of building.

6. Let's get started.
Slide all the post components on the 6x6 post. That would be the 6x6 sleeve, bottom post base, 6x6 trim piece and the trim ring. Do that with all four posts.

7. If you ordered an electrical package, there will be a 6x6 post with a notch in one side. Put the sleeve with receptacle on that post. Make sure all posts are at the marks you made with template. That would be the inside core of 6x6 post.

8. When you have all posts at marks, get the template and fasten it to tops of post. Make sure all post components are on. As you cannot put these on later. Make sure all posts are level and everything is square.

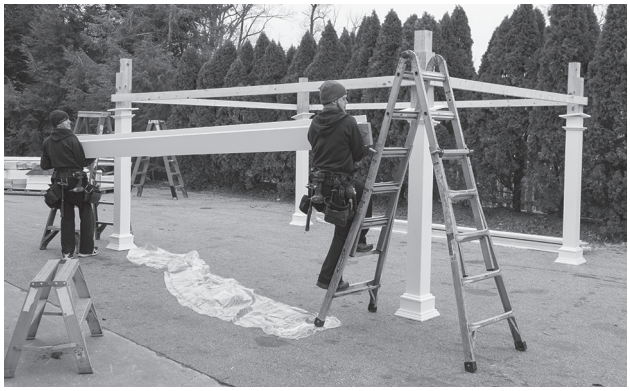

9. Now you are ready to install the headers. Start with the long side. If you have a square pavilion, it would be the shorter headers. It might take three or four guys for this step. Fasten header to post with two 3½" screws. Do not use the predrilled holes.

10. Once you have the two long side headers up, put the shorter ones on. These get fastened to other headers with three 3½" screws. Use the three predrilled holes going into other header.

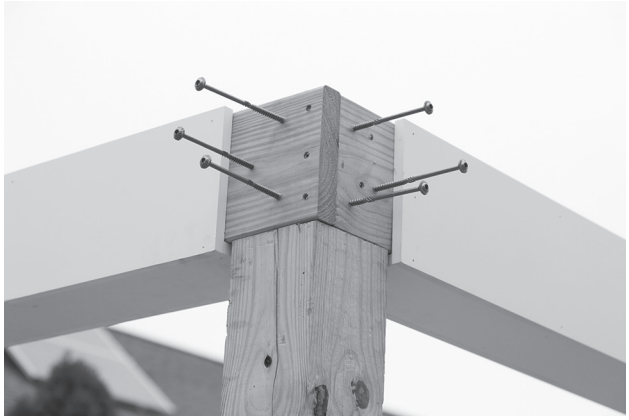

11. Making sure everything is still square and level, install the long 8" GRK screws. 6 pcs. per corner using the predrilled holes.

12. Next step, install the 2x12 rafter plates. Make sure that the plate is at the center of post. The overhangs are the same on both ends. There will be a gap between the trim and plate. Fasten with two 3½" screws down into post.

13. Doing same as step 12. Then fasten the corner together with one 3½" screw. When you have all four plates up, go back and put two 3½" screws in every 16" on center plate down into header.

14. Next step is installing the fascia. Doing the long sides first. Keep fascia up past the plate 1⅛" for asphalt shingles and 1⅞" for metal roof. Fasten fascia to plate with one 2½" whitehead screw every 16"

15. When you have two long sides up, put the shorter ones up. These overlap the long ones. Fasten with two 2½" screws into long side fascia then every 16". You might have to cut these to length.

16. You are now ready to take the template off the post.

17. Next step is making sure all posts are level and at the marks on the cement.

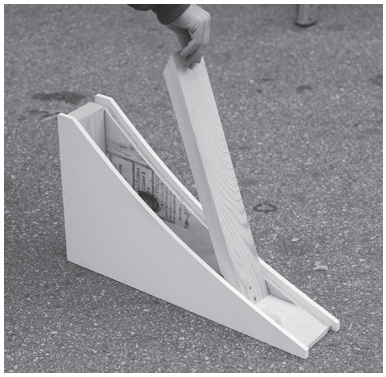

18. Next step is installing the corner braces. Take the 2x4 board out from center of brace.

19. Keep brace flush on the outside of post. Fasten to post with two 3½" screws and up into header with two 3½" screws. Line the brace up with the seam on bottom of header. Do that with all eight braces.

20. Put the 2x4 center board back into brace. Fasten with two 2½" screws.

Note: If you purchased a pavilion with either a Rubber or a Cedar Shake roof, please read the instructions in this box.

I you ordered the above roofing, the shingles will come on the roof and all you will need to install is the capping. Also you will NOT need to take off the roo decking boards as described below. You will also NOT be able to connect the roof to the top plate from the top as described below. You will need to screw from the underside o the top plate overhang up into each rafter. Also i you have type o roofing, you will be sent an insert that will tell you how to install the capping properly.

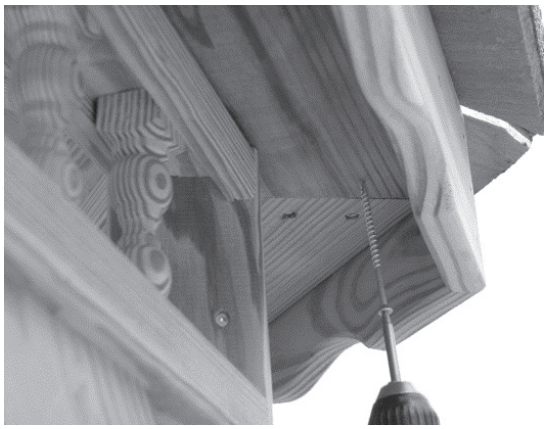

Note: On Ramadas with stained ceilings, the top plate will not have a vinyl covering on it at all. But on Ramadas with unstained ceilings, the top plate will have a vinyl covering on the outside edge.

21. Next step, install the bottom brace covers.

22. Fasten them with three cortex screws. You will want to countersink these screws. Continue with all eight braces.

23. Fasten the trim ring to bottom of braces with two 2½" screws.

24. Next step, fasten black L shape bracket to bottom of 6x6 wood post. Slide the 6x6 sleeve up so the bracket fits underneath it. You can fasten the sleeve to post if you want to. It will all get covered. Fasten bracket to post with five 2½" screws.

25. Make sure all posts are level and at the marks. Drill down with ½" masonry bit about ½" deeper than length of anchor bolt.

26. Putting the wedge anchor in, make sure the nut and washer are on. You might need to tap it in with a hammer. When you have it down against the washer, tighten the nut with a wrench. Slide the post base down. Do that with all eight brackets.

27. Slide the 6x6 sleeve trim up to the trim ring. You can fasten these if needed. Most times it stays in place. Do that with all four posts.

Note: For even sided square Ramadas (10x10) all of the roof sections will have a flat sided top. They will also come with a boxed in frame that will go between the top of the roofing sections to connect them together. Also they will come with a pre-made roof peak section to give the roof a point on the top.

28. Installing the inside corner trim, fasten with three cortex screws.

29. Fill all the cortex screw holes with plugs. Tap them with a hammer till they are flush with trim.

30. Installing the outside corner trim. These will have six predrilled holes. Use cortex screws. Put plugs in holes same as step 29. You will have a tube of caulk in hardware box. You can use it to fill up all seams and cracks

31. Now you are ready to assemble the roof panels. First match the numbers up that are on top of panels.

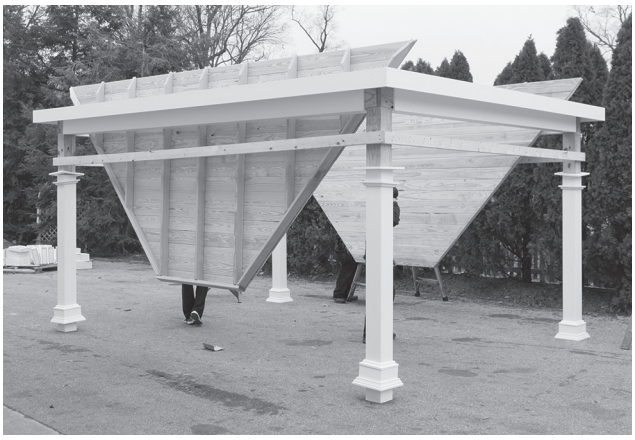

32. Push the panels up past the headers. Then it can hang there until you are ready to take them up.

33. Getting one of the panels, swing it up in place and put a prop in. Prop is not included in package. You can use the 2x4 template for a prop.

34. Next, take the second panel up. Lower the prop until the ridgepole meets. Make sure the ridgepole is flush on both ends and at the bottom. Screw together with 2½" screws every 16".

35. Now you are ready for the gable roof panels. Make sure the numbers match. Pushing it from the outside up.

36. When you have the panel up in place, screw the hip rafters together with 2½" screws every 24". Sometimes you have to lift the center of ridgepole up so the bottom come together. Continue this step with other side.

37. When you have all the roof panels fastened together, the next step is fastening the rafters to plate. The bottom 1x6 T&G board is screwed on. Take those screws out and remove T&G board.

38. When you have all T&G boards removed, screw rafters down to plate with three 2½" screws. One on each side and one down the center. On the hip rafters, put two down the center of each rafter.

39. When you have all rafters fastened, put the T&G boards back on.

40. You are now ready for roof shingles.

Please see the attached insert for the proper installation of shingles, capping, or any other options selected.

Note: If you have a cupola the cupola should not be installed until all of the shingles are on the roof.